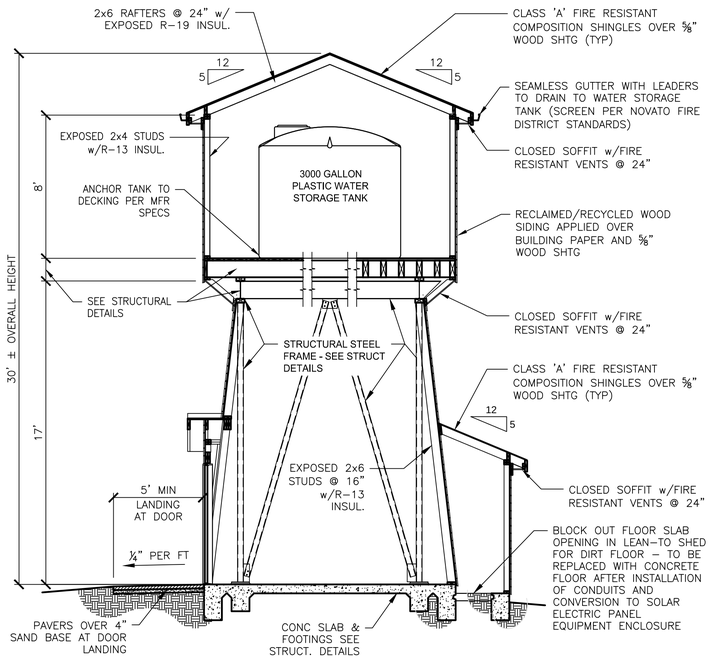

A/5 **SECTION**

SCALE: ¼" = 1'-0"

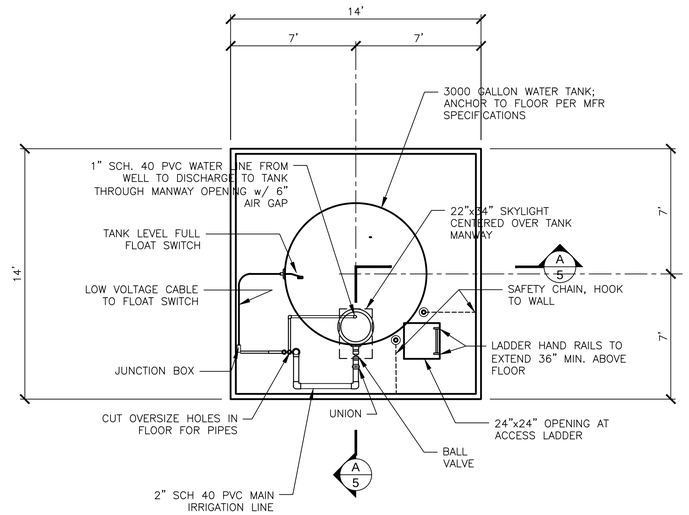

TANK LEVEL FLOOR PLAN

SCALE: ¼" = 1'-0"

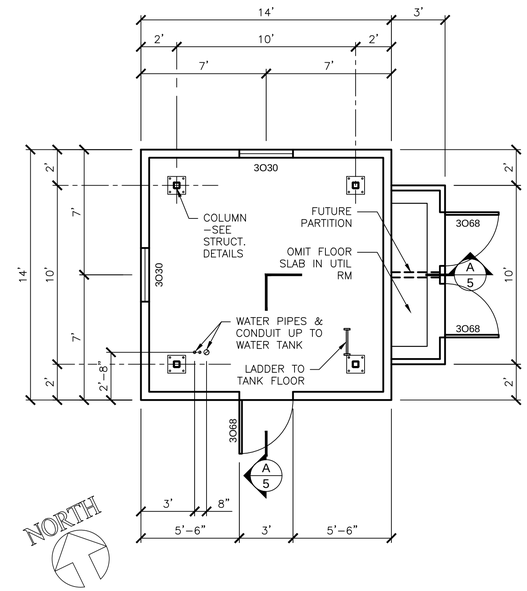

GROUND FLOOR PLAN

SCALE: ¼" = 1'-0"

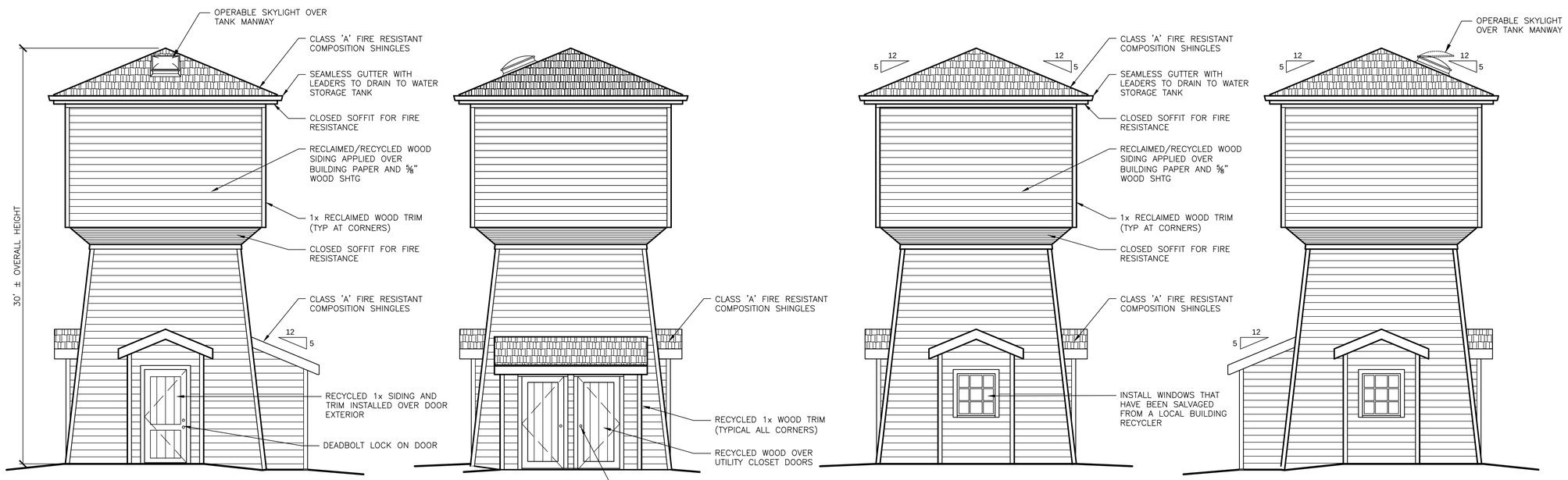

WATER TOWER ELEVATIONS

SCALE: ¼" = 1'-0"

Revisions/Issue

0	2/9/10
4	7/12/10
5.1	8/22/11

NOVATO COMMUNITY GARDEN
www.novatolivewell.org

WATER TOWER Plan & Elevations

PROPOSED NOVATO COMMUNITY GARDEN

AT O'HAIR PARK
NOVATO BLVD, NOVATO, CA

Date: 8/22/11
Scale: As Noted
Drawn: DJF
Checked:
Rev:

SHEET 5 OF 6